Cryptography and Network Security

Third Edition

by William Stallings

Lecture slides by Lawrie Brown

Edited by Dick Steflik

Web Security

- Web now widely used by business, government, individuals
- but Internet & Web are vulnerable
- have a variety of threats
  - integrity
  - confidentiality
  - denial of service
  - authentication
- need added security mechanisms

SSL (Secure Socket Layer)

- transport layer security service
- originally developed by Netscape
- version 3 designed with public input
- subsequently became Internet standard known as TLS (Transport Layer Security)
- uses TCP to provide a reliable end-to-end service
- SSL has two layers of protocols

Where SSL Fits

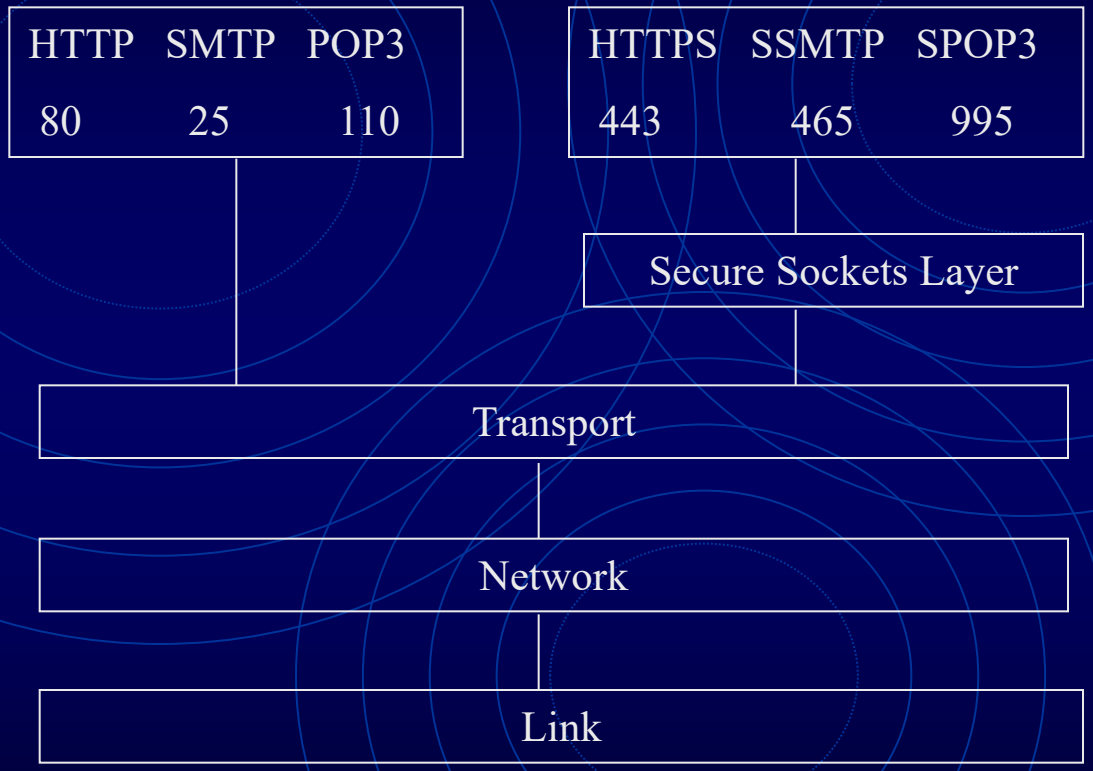

Uses Public Key Scheme

- Each client-server pair uses
  - 2 public keys
    - one for client (browser)
      - created when browser is installed on client machine
    - one for server (http server)
      - created when server is installed on server hardware
  - 2 private keys
    - one for client browser
    - one for server (http server)

SSL Architecture

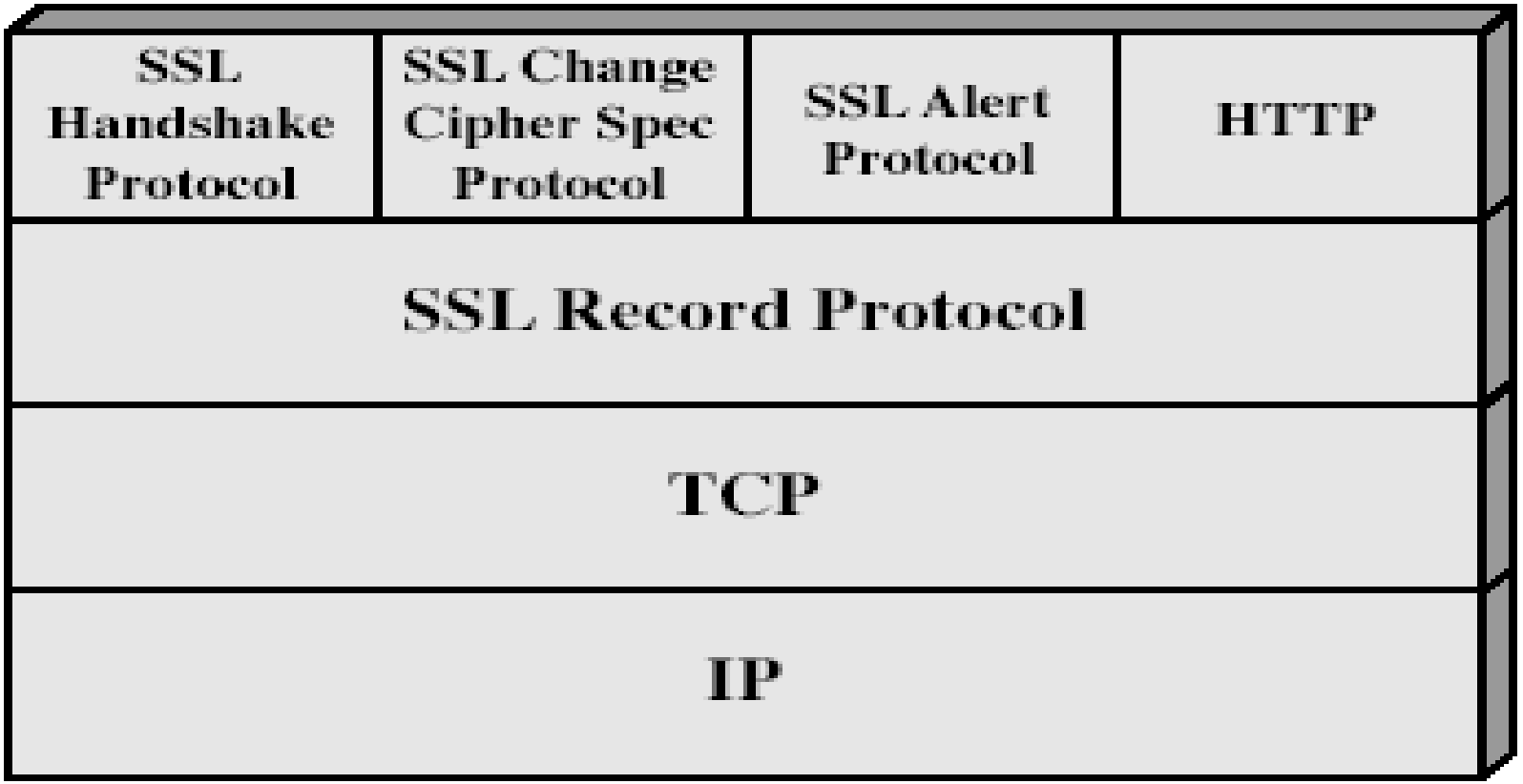

SSL Architecture

- **SSL session**
  - an association between client & server
  - created by the Handshake Protocol
  - define a set of cryptographic parameters
  - may be shared by multiple SSL connections
- **SSL connection**
  - a transient, peer-to-peer, communications link
  - associated with 1 SSL session

SSL Record Protocol

- **confidentiality**
  - using symmetric encryption with a shared secret key defined by Handshake Protocol
  - IDEA, RC2-40, DES-40, DES, 3DES, Fortezza, RC4-40, RC4-128
  - message is compressed before encryption
- **message integrity**
  - using a MAC (Message Authentication Code) created using a shared secret key and a short message

SSL Change Cipher Spec Protocol

- one of 3 SSL specific protocols which use the SSL Record protocol
- a single message
- causes pending state to become current
- hence updating the cipher suite in use

SSL Alert Protocol

- conveys SSL-related alerts to peer entity
- severity
  - warning or fatal
- specific alert
  - unexpected message, bad record mac, decompression failure, handshake failure, illegal parameter
  - close notify, no certificate, bad certificate, unsupported certificate, certificate revoked, certificate expired, certificate unknown
- compressed & encrypted like all SSL data

SSL Handshake Protocol

- allows server & client to:
  - authenticate each other
  - to negotiate encryption & MAC algorithms
  - to negotiate cryptographic keys to be used
- comprises a series of messages in phases
  - Establish Security Capabilities
  - Server Authentication and Key Exchange
  - Client Authentication and Key Exchange
  - Finish

SSL Handshake Protocol

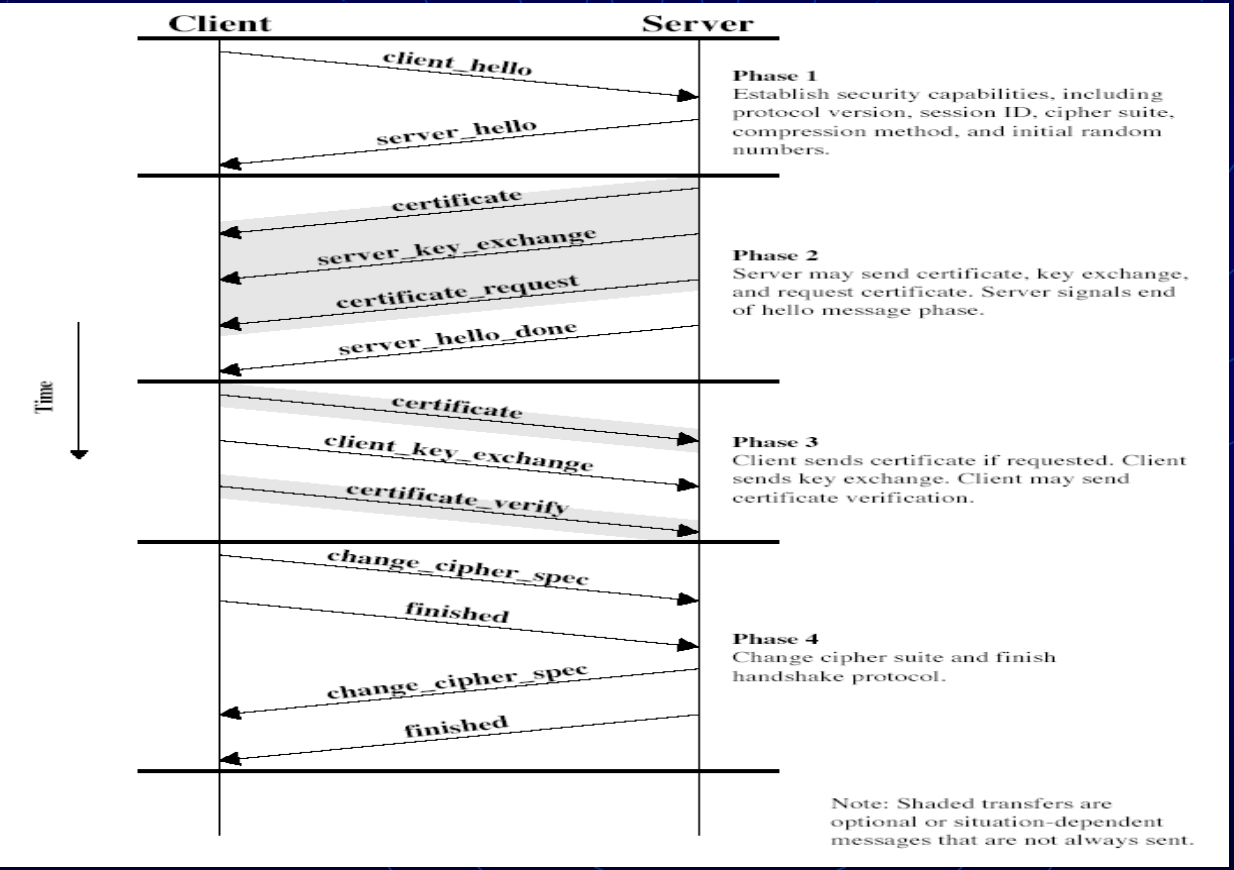

TLS (Transport Layer Security)

- IETF standard RFC 2246 similar to SSLv3
- with minor differences
  - in record format version number
  - uses HMAC for MAC
  - a pseudo-random function expands secrets
  - has additional alert codes
  - some changes in supported ciphers
  - changes in certificate negotiations
  - changes in use of padding

Secure Electronic Transactions (SET)

- open encryption & security specification
- to protect Internet credit card transactions
- developed in 1996 by Mastercard, Visa etc
- not a payment system, rather a set of security protocols & formats
  - secure communications amongst parties
  - trust from use of X.509v3 certificates
  - privacy by restricted info to those who need it

SET Components

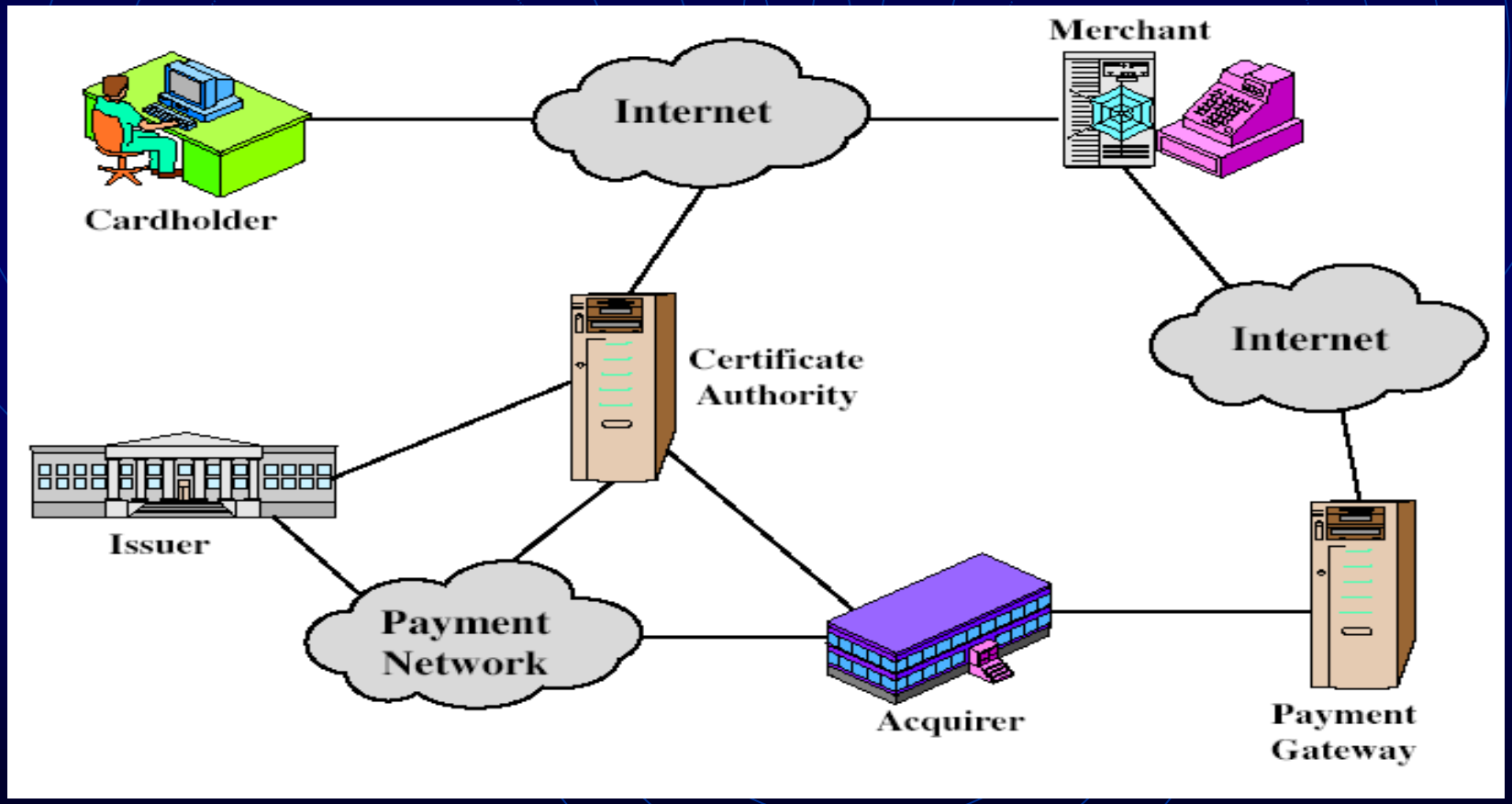

SET Transaction

1. customer opens account
2. customer receives a certificate
3. merchants have their own certificates
4. customer places an order
5. merchant is verified
6. order and payment are sent
7. merchant requests payment authorization
8. merchant confirms order
9. merchant provides goods or service
10. merchant requests payment

Dual Signature

- customer creates dual messages
  - order information (OI) for merchant
  - payment information (PI) for bank
- neither party needs details of other
- but **must** know they are linked
- use a dual signature for this
  - signed concatenated hashes of OI & PI

Purchase Request – Customer

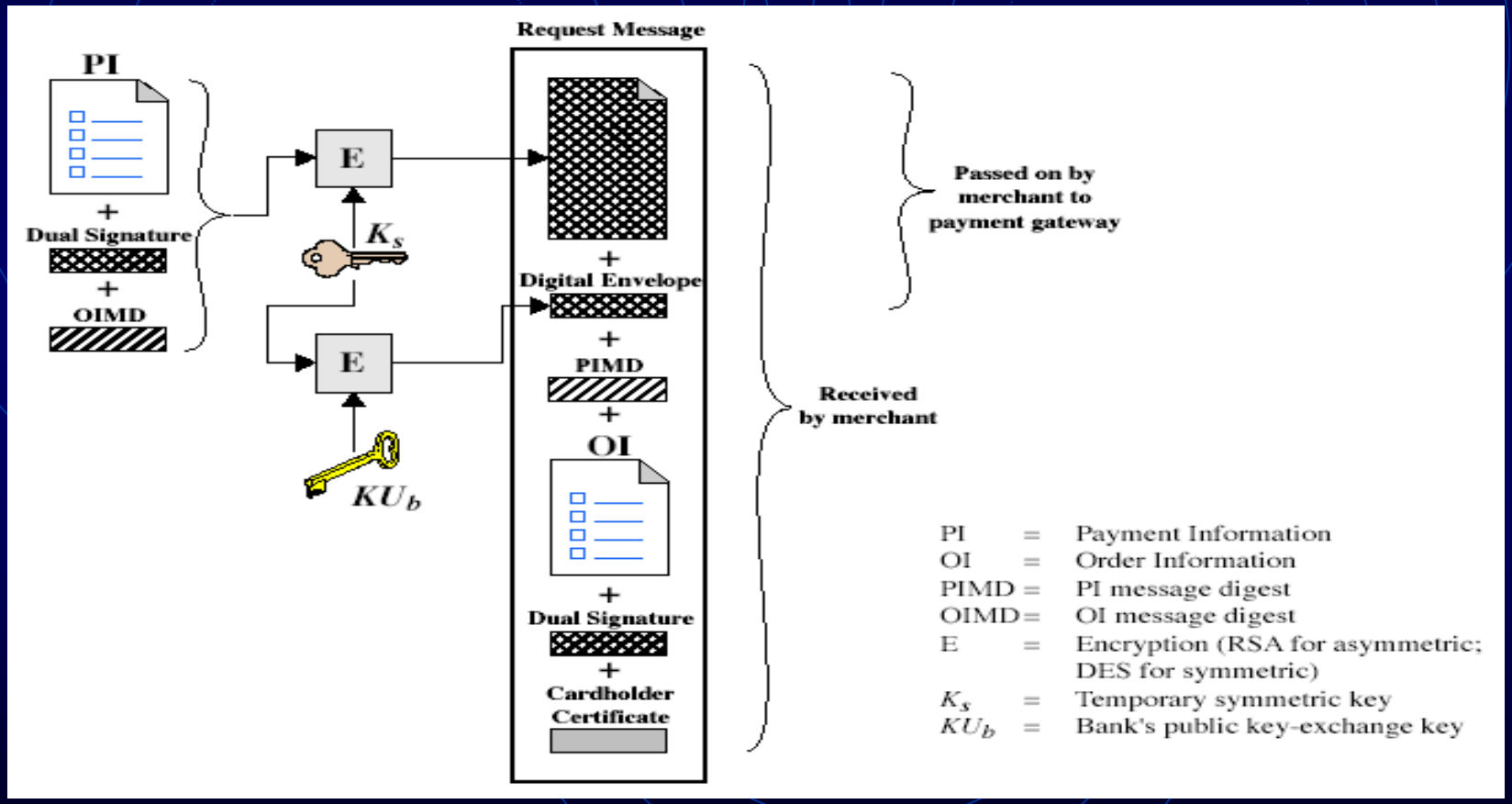

Purchase Request – Merchant

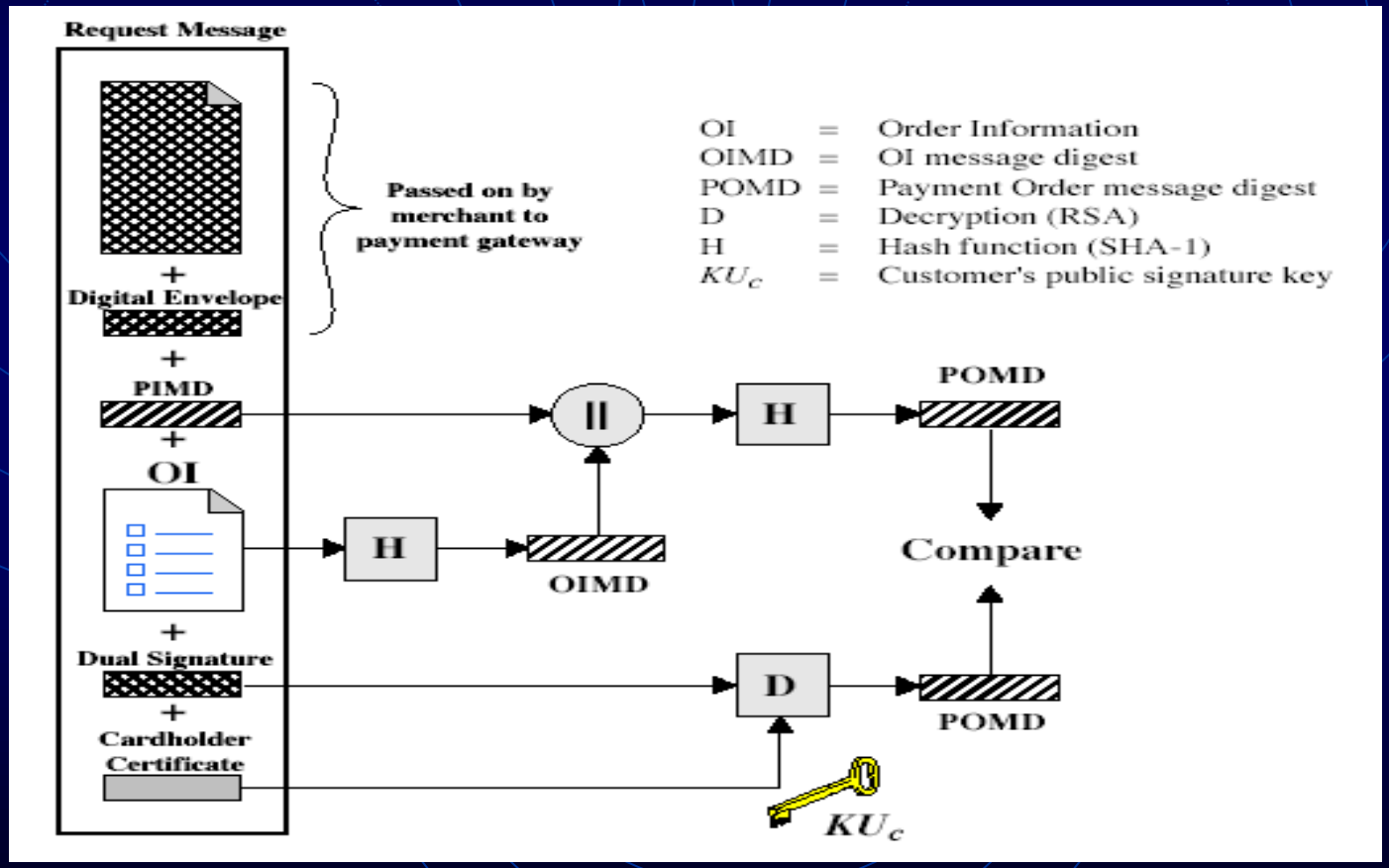

Purchase Request – Merchant

1. verifies cardholder certificates using CA sigs
2. verifies dual signature using customer's public signature key to ensure order has not been tampered with in transit & that it was signed using cardholder's private signature key
3. processes order and forwards the payment information to the payment gateway for authorization (described later)
4. sends a purchase response to cardholder

Payment Gateway Authorization

1. verifies all certificates
2. decrypts digital envelope of authorization block to obtain symmetric key & then decrypts authorization block
3. verifies merchant's signature on authorization block
4. decrypts digital envelope of payment block to obtain symmetric key & then decrypts payment block
5. verifies dual signature on payment block
6. verifies that transaction ID received from merchant matches that in PI received (indirectly) from customer
7. requests & receives an authorization from issuer
8. sends authorization response back to merchant

Payment Capture

- merchant sends payment gateway a payment capture request
- gateway checks request
- then causes funds to be transferred to merchants account
- notifies merchant using capture response

Summary

- have considered:
  - need for web security
  - SSL/TLS transport layer security protocols
  - SET secure credit card payment protocols